AND™
SLEEVE

AND™
SLEEVE

Quality
isn't expensive
its Priceless

Adapter Sleeves
Withdawal Sleeves
Lock Nuts
Lock Washers

Indo Steel Engineers
Mfrs : Adapter Sleeves, Withdrawal Sleeves,
Lock Nuts & Lock Washers

Office & Sales: E-47, Industrial Area, Jalandhar - 144004
Works: C-46, Canal Road, Industrial Area,
Jalandhar - 144004
Ph: +91-181-2290099, 5095222
E-mail: varunabearings@yahoo.com

Auth. Distributor:

Company Profile

Indo Steel Engineers is an ISO 9001: 2008 certified company whose solid foundation was laid in 1976 in Jalandhar (Punjab) by a futuristic visionary, its founder and owner Mr. Avinash Gupta. The company though had a modest start, is today amongst the best Bearing Sleeves manufacturing companies in the country.

Fulfilling the dreams of its founder, the company is moving ahead with an e-speed under the able leadership of his son, Mr. Nitin Gupta, supported by a highly professional team with manufacturing and marketing skills. The team with their vast technical knowledge and worldwide experience in customer relationship have managed to spread the company's reach to remote Indian locations and exports to South East Asia, Australia and UAE.

Indo Steel Engineers has an excellent infrastructure with latest CNC machinery. Its main products are bearing accessories i.e. Adapter Sleeves, Withdrawal Sleeves, Lock Nuts and Lock Washers, which are produced in environment friendly conditions and customer standards and safety norms.

Commitment to excellence in quality and capability of producing parts with special measures on client request have earned this company global recognition. All the products are produced as per the International Standard Specifications, which guarantees all the parts' precision and standardizing. One of the characteristics that make ISE different is the vertical production. It controls all the transformation technology from the raw material until the finished product.

The raw material used is C20 or C30 which comes from qualified suppliers, providing proper resistance and dimensional precision. The dimensions and material conform to DIN 5415/ISO 2982-1. The bore tolerance before slitting is in the tolerance zone JS9 for the 1:12 and JS7 for 1:30 taper. The thread conform tolerance grade 6g to din/ISO 965- 3 upto M200 size, trapezoidal threads are used over M200.

Total dedication to quality has made it possible for the company to achieve such a proud position in the global market. Indo Steel Engineers will continue with its efforts to maintain this level of excellence to build a harmonious and long-lasting business relationship with its domestic and international customers.

We welcome companies at home and abroad to come and negotate business with us

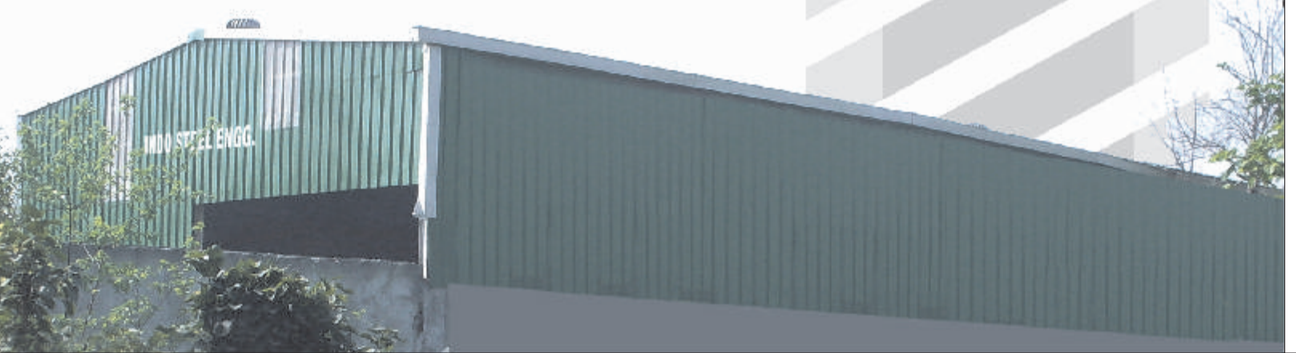

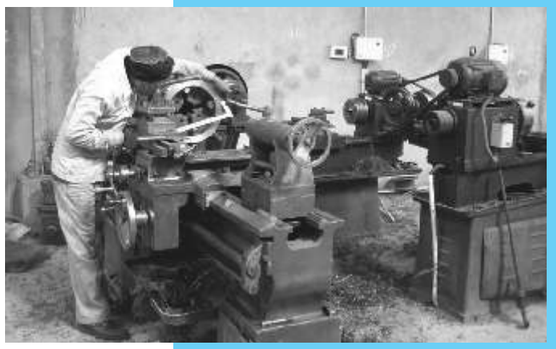

INDEX

Adapter Sleeves

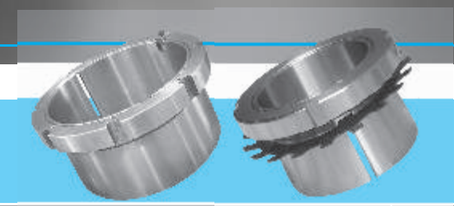

H2	7p
H3	8p
H23	9p
H23	10p
H31	11p
H32	12p
H30	13p
H39	14p

Adapter Hydraulic Sleeves

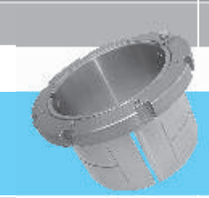

HOH 23	15p
HOH 31	16p
HOH 30	17p
HOH 39	18p

Withdrawal Sleeves

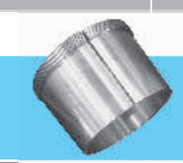

AH 2	19p
AH 3	20p
AH 23	21p
AH 23	22p
AH 32	23p
AH 22	24p
AH 30	25p
AH 240	26p
AH 241	27p
AH 39	28p

Lock Nuts

	29p
KM AN	30p
KM AN KML ANL	31p
HM 31/AN	32p
HM 30/ANL	33p
HM / HN	34p
HML / HNL	35p

Lock Washers

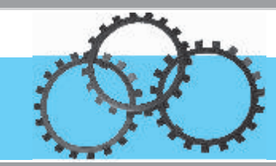

MB / AW	36p
MBL / AWL	37p

Lock Plates

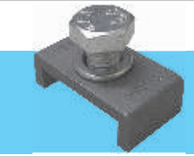

MS 31 / AL	38p
MS 30 / ALL	38p

Index Table

Taper Bore Beaing No.					Applicable adapter and withdrawal sleeves series	
Self-Ailgning Ball Bearings	Spherical Roll Bearings	Deep Groove Ball Bearings	Cylindrical Roll Bear-ings	Insert Bearings for Bearing units		
1204K-1222K	-	62211K-6222K	N206K-N222K NU204K-NU222K	-	ADAPTER SLEEVES	H 2
1304K-1322K 2204K-2222K	22205K-22222K 21308K-21322K	6311K-6322K	NU2205K-NU2222K N306K-N322K NU304K-NU322K	-		H 3
2304K-2322K	23218K-23256K 22308K-22356K	-	NU2305K-NU2356K	UK205-UK218 UK305-UK328 UKX05-UKX20		H 23 HOH 23
-	23120K-232/500K 22224K-22264K	6324K-6340K	NU2224K-NU2264K N(NU)324K-340K	-		H 31 HOH 31
-	23260K-232/500K	-	-	-		H 32 HOH 32
-	23024K-230/500K	6224K-6240K	N(NU)224K-264K N(NU)344K-356K	-		H 30 HOH 39
-	23936K-239/500K	-	-	-		H 39 HOH 39
1208K-1222K	-	-	N206K-N222K NU208-NU222K	-		AH 2
1308K-1322K 2208K-2220K	22208K-22220K 21308K-21322K	6311K-6322K	N(NU)308-322K NU2208K-NU2220K	-	WITHDRAWAL SLEEVES	AH 3
2308K-2322K	23244K-23256K 22308K-22356K	-	NU2308K-NU2356K	-		AH 23 AOH 23
2222K	23120K-231/500K 22222K-22234K	-	NU2222K-NU2234K	-		AH 31 AOH 31
-	23218K-23240 23260K-232/500K	-	-	-		AH 32 AOH 32
-	22236K-22264K	-	NU2236K-NU2264K	-		AH 22 AOH 22
-	23024K-230/500K	-	NU3024K-Nu3064	-		AH 30 AOH 30
-	24024K-240/500K	-	-	-		AH 240 AOH 240
-	24122K-241/500K	-	-	-		AH 241 AOH 241
-	23936K-239500K	-	-	-		AH 39 AOH 39
Locknuts						KM. KML HM. HML
Lockwashers and Lockplates						MB. MBL MS31, MS30

Adapter Sleeves

HE 2
HS 2
HA 2

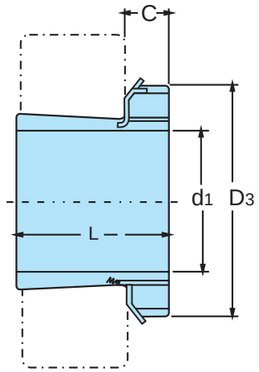

TAPER 1:12

Adapter Sleeves No.	d1				L	D3	C	Lock	Lock	Weight
	H mm	HE in	HS in	HA in	mm	mm	mm	Nuts	Washers	Kg
H204	17	-	-	-	24	32	7	KM 04	MB 04	0.041
H205	20	3/4	7/8	13/16	26	38	8	KM 05	MB 05	0.070
H206	25	1	7/8	15/16	27	45	8	KM 06	MB 06	0.099
H207	30	1 1/4	1 1/8	1 3/16	29	52	9	KM 07	MB 07	0.125
H208	35	1 1/4	1 3/8	1 5/16	31	58	10	KM 08	MB 08	0.174
H209	40	1 1/2	1 5/8	1 7/16	33	65	11	KM 09	MB 09	0.227
H210	45	1 3/4	1 5/8	1 11/16	35	70	12	KM 10	MB 10	0.740
H211	50	2	1 7/8	1 15/16	37	75	12	KM 11	MB 11	0.308
H212	55	2 1/4 (2”)	2 1/8	2 1/16	38	80	13	KM 12	MB 12	0.346
H213	60	2 1/4	2 3/8	2 3/16	40	85	14	KM 13	MB 13	0.401
H214	60	2 3/8	-	-	41	92	14	KM 14	MB 14	0.593
H215	65	2 1/2	2 5/8	2 7/16	43	98	15	KM 15	MB 15	0.707
H216	70	2 3/4	2 7/8	2 11/16	46	105	17	KM 16	MB 16	0.882
H217	75	3	-	2 15/16	50	110	18	KM 17	MB 17	1.020
H218	80	3 1/4	-	3 3/16	52	120	18	KM 18	MB 18	1.190
H219	85	3 1/4	-	3 5/16	55	125	19	KM 19	MB 19	1.370
H220	90	3 1/2	-	3 7/16	58	130	20	KM 20	MB 20	1.490
H221	95	-	-	-	60	140	20	KM 21	MB 21	1.720
H222	100	4	-	3 15/16	63	145	21	KM 22	MB 22	1.930

Adapter sleeves are supplied complete with lock nuts and lock washers or lock plates.

H 3
HE 3
HS 3
HA 3

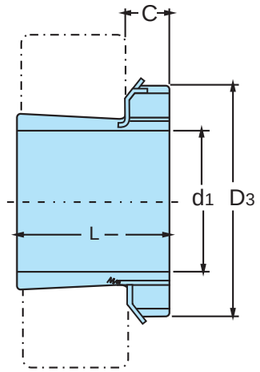

TAPER 1:12

Adapter Sleeves No.	d1 H mm	d1 HE in	d1 HS in	d1 HA in	L mm	D3 mm	C mm	Lock Nuts	Lock Washers	Weight Kg
H304	17	-	-	-	28	32	7	KM 04	MB 04	0.045
H305	20	3/4	7/8	13/16	29	38	8	KM 05	MB 05	0.075
H306	25	1	7/8	15/16	31	45	8	KM 06	MB 06	0.109
H307	30	1 1/4	1 1/8	1 3/16	35	52	9	KM 07	MB 07	0.142
H308	35	1 1/4	1 3/8	1 5/16	36	58	10	KM 08	MB 08	0.189
H309	40	1 1/2	1 5/8	1 7/16	39	65	11	KM 09	MB 09	0.248
H310	45	1 3/4	1 5/8	1 11/16	42	70	12	KM 10	MB 10	0.303
H311	50	2	1 7/8	1 15/16	45	75	12	KM 11	MB 11	0.450
H312	55	2 1/4 (2")	2 1/8	2 1/16	47	80	13	KM 12	MB 12	0.394
H313	60	2 1/4	2 3/8	2 3/16	50	85	14	KM 13	MB 13	0.458
H314	60	2 3/8	-	-	52	92	14	KM 14	MB 14	0.723
H315	65	2 1/2	2 5/8	2 7/16	55	98	15	KM 15	MB 15	0.831
H316	70	2 3/4	2 7/8	2 11/16	59	105	17	KM 16	MB 16	1.030
H317	75	3	-	2 15/16	63	110	18	KM 17	MB 17	1.180
H318	80	3 1/4	-	3 3/16	65	120	18	KM 18	MB 18	1.370
H319	85	3 1/4	-	3 5/16	68	125	19	KM 19	MB 19	1.560
H320	90	3 1/2	-	3 7/16	71	130	20	KM 20	MB 20	1.690
H321	95	-	-	-	74	140	20	KM 21	MB 21	1.950
H322	100	4	-	3 15/16	77	145	21	KM 22	MB 22	2.180

• Adapter sleeves are supplied complete with lock nuts and lock washers or lock plates.

H 23
HE 23
HS 23
HA 23

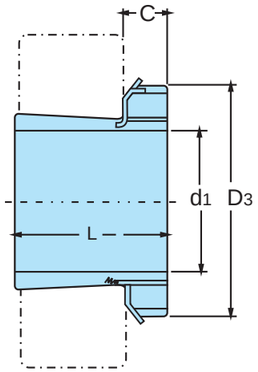

TAPER 1:12

Adapter Sleeves No.	d1 H mm	d1 HE in	d1 HS in	d1 HA in	L mm	D3 mm	C mm	Lock Nuts	Lock Washers	Weight Kg
H2304	17	-	-	-	31	32	7	KM 04	MB 04	0.049
H2305	20	3/4	7/8	13/16	35	38	8	KM 05	MB 05	0.087
H2306	25	1	7/8	15/16	38	45	8	KM 06	MB 06	0.126
H2307	30	1 1/4	1 1/8	1 3/16	43	52	9	KM 07	MB 07	0.165
H2308	35	1 1/4	1 3/8	1 5/16	46	58	10	KM 08	MB 08	0.224
H2309	40	1 1/2	1 5/8	1 7/16	50	65	11	KM 09	MB 09	0.280
H2310	45	1 3/4	1 5/8	1 11/16	55	70	12	KM 10	MB 10	0.362
H2311	50	2	1 7/8	1 15/16	59	75	12	KM 11	MB 11	0.420
H2312	55	2 1/4	2 1/8	2 1/16	62	80	13	KM 12	MB 12	0.481
H2313	60	2 1/4	2 3/8	2 3/16	65	85	14	KM 13	MB 13	0.557
H2314	60	2 3/8	-	-	68	92	14	KM 14	MB 14	0.897
H2315	65	2 1/2	2 5/8	2 7/16	73	98	15	KM 15	MB 15	1.050
H2316	70	2 3/4	2 7/8	2 11/16	78	105	17	KM 16	MB 16	1.280
H2317	75	3	-	2 15/16	82	110	18	KM 17	MB 17	1.450
H2318	80	3 1/4	-	3 3/16	86	120	18	KM 18	MB 18	1.690
H2319	85	3 1/4	-	3 5/16	90	125	19	KM 19	MB 19	1.920
H2320	90	3 1/2	-	3 7/16	97	130	20	KM 20	MB 20	2.150
H2321	95	-	-	-	101	140	20	KM 21	MB 21	2.460
H2322	100	4	-	3 15/16	105	145	21	KM 22	MB 22	2.740
H2324	110	4 1/4	-	4 3/16	112	155	22	KM 24	MB 24	3.190
H2326	115	4 1/2	-	4 7/16	121	165	23	KM 26	MB 26	4.600

• Adapter sleeves are supplied complete with lock nuts and lock washers or lock plates.

H 23
HE 23
HS 23
HA 23

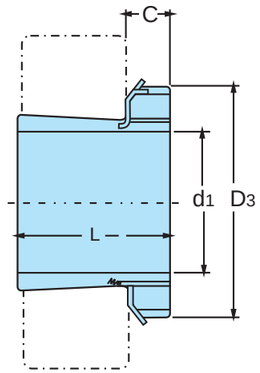

TAPER 1:12

Adapter Sleeves No.	d1				L	D3	C	C1	Lock	Lock	Weight
	H mm	HE in	HS in	HA in	mm	mm	mm	mm	Nuts	Washers	Kg
H2328	125	5	####	4 15/16	131	180	24	-	KM 28	MB 28	5.550
H2330	135	5 1/4	-	5 3/16	139	195	26	-	KM 30	MB 30	6.630
H2332	140	5 1/2	-	5 7/16	147	210	28	-	KM 32	MB 32	9.140
H2334	150	6	-	5 15/16	154	220	29	-	KM 34	MB 34	#####
H2336	160	6 1/2	-	6 7/16	161	230	30	-	KM 36	MB 36	#####
H2338	170	6 3/4	-	6 15/16	169	240	31	-	KM 38	MB 38	#####
H2340	180	7	-	7 3/16	176	250	32	-	KM 40	MB 40	#####
H2344	200	-	-	-	186	280	32	44	HM 44	MB 44	#####
H2348	220	8 1/2	-	8 15/16	199	300	34	46	HM 48	MB 48	#####
H2352	240	-	-	-	211	330	36	49	HM 52	MB 52	#####
H2356	260	-	-	-	224	350	38	51	HM 56	MB 56	#####

• Adapter sleeves are supplied complete with lock nuts and lock washers or lock plates.

H 31
HE 31
HS 31
HA 31

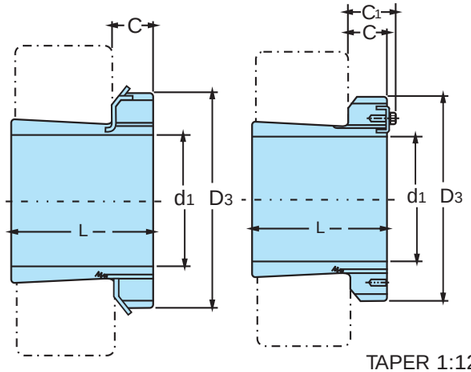

TAPER 1:12

Adapter Sleeves No.	d1			L	D3	C	C1	Lock	Lock	Weight
	H mm	HE mm	HS in	mm	mm	mm	mm	Nuts	Washers	Kg
H3120	90	3 1/2	3 7/16	76	130	20	-	KM 20	MB 20	1.800
H3122	100	4	3 15/16	81	145	21	-	KM 22	MB 22	2.250
H3124	110	4 1/4	4 3/16	88	155	22	-	KM 24	MB 24	2.640
H3126	115	4 1/2	4 7/16	92	165	23	-	KM 26	MB 26	3.660
H3128	125	5	4 15/16	97	180	24	-	KM 28	MB 28	4.340
H3130	135	5 1/2	5 3/16	111	195	26	-	KM 30	MB 30	5.520
H3132	140	6 1/2	5 7/16	119	210	28	-	KM 32	MB 32	7.670
H3134	150	6 3/4	5 15/16	122	220	29	-	KM 34	MB 34	8.380
H3136	160	7	6 7/16	131	230	30	-	KM 36	MB 36	9.500
H3138	170	-	6 15/16	141	240	31	-	KM 38	MB 38	10.800
H3140	180	-	7 3/16	150	250	32	-	KM 40	MB 40	12.100
H3144	200	8 1/2	7 15/16	161	280	32	44	HM 44	MB 44	14.700
H3148	220	9 1/2	-	172	300	34	46	HM 48	MB 48	17.300
H3152	240	-	-	190	330	36	49	HM 52	MB 52	22.000
H3156	260	-	-	195	350	38	51	HM 56	MB 56	24.500
H3160	280	-	-	208	380	40	53	HM31 60	MS31 60	30.200
H3164	300	-	-	226	400	42	56	HM31 64	MS31 64	34.900
H3168	320	-	-	254	440	55	72	HM31 68	MS31 68	49.500
H3172	340	-	-	259	460	58	75	HM31 72	MS31 72	54.200
H3176	360	-	-	264	490	60	77	HM31 76	MS31 76	61.700
H3180	380	-	-	272	520	62	82	HM31 80	MS31 80	70.600
H3184	400	-	-	304	540	70	90	HM31 84	MS31 84	84.200
H3188	410	-	-	307	560	70	90	HM31 88	MS31 88	104.000
H3192	430	-	-	326	580	75	95	HM31 92	MS31 92	116.000
H3196	450	-	-	335	620	75	95	HM31 96	MS31 96	133.000
H31/500	470	-	-	356	630	80	100	HM31 100	MS31 100	143.000

• Adapter sleeves are supplied complete with lock nuts and lock washers or lock plate plates.
• Adapter for these bores srw designated HE, e.g. HE3120 .
• Adapter for these bores srw designated HS, e.g. HS3120 .

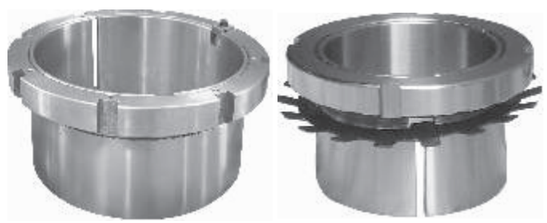

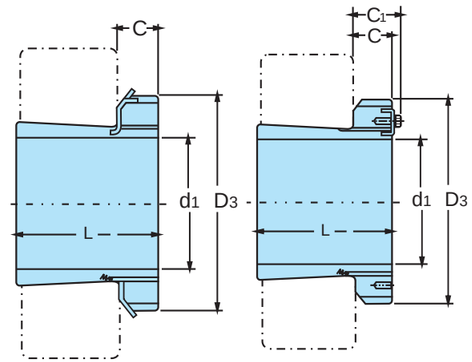

H 32

TAPER 1:12

Adapter Sleeves No.	d1 mm	L mm	D3 mm	C mm	C1 mm	Lock Nuts	Lock Washers	Weight Kg
H3260	280	240	380	40	53	HM31 60	MS31 60	34.100
H3264	300	258	400	42	56	HM31 64	MS31 64	39.300
H3268	320	288	440	55	72	HM31 68	MS31 68	54.600
H3272	340	299	460	58	75	HM31 72	MS31 72	60.200
H3276	360	310	490	60	77	HM31 76	MS31 76	69.600
H3280	380	328	520	62	82	HM31 80	MS31 80	81.000
H3284	400	352	540	70	90	HM31 84	MS31 84	94.000
H3288	410	361	560	70	90	HM31 88	MS31 88	118.000
H3292	430	382	580	75	95	HM31 92	MS31 92	132.000
H3296	450	397	620	75	95	HM31 96	MS31 96	152.000
H32/500	470	428	630	80	100	HM31 100	MS31 100	166.000

• Adapter sleeves are supplied complete with lock nuts and lock washers or lock plates.

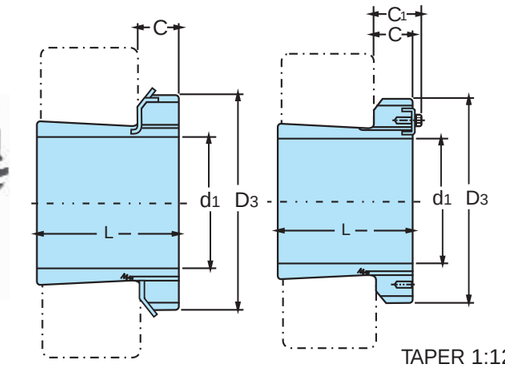

H 30
HE 30
HA 30

TAPER 1:12

Adapter Sleeves No.	d1 H mm	d1 HE mm	d1 HS in	L mm	D3 mm	C mm	C1 mm	Lock Nuts	Lock Washers and Lock Platea	Weight Kg
H3024	110	4 1/4	4 3/16	72	145	22	-	KML 24	MBL 24	1.930
H3026	115	4 1/2	4 7/16	80	155	23	-	KML 26	MBL 26	2.850
H3028	125	5	4 15/16	82	165	24	-	KML 28	MBL 26	3.160
H3030	135	5 1/4	5 3/16	87	180	26	-	KML 30	MBL 30	3.890
H3032	140	5 1/2	5 7/16	93	190	28	-	KML 32	MBL 32	5.210
H3034	150	6	5 15/16	101	200	29	-	KML 34	MBL 34	5.990
H3036	160	6 1/2	6 7/16	109	210	30	-	KML 36	MBL 36	6.830
H3038	170	6 3/4	6 15/16	112	220	31	-	KML 38	MBL 38	7.450
H3040	180	7	7 3/16	120	240	32	-	KML 40	MBL 40	9.190
H3044	200	-	7 15/16	126	260	32	41	HML 44	MS30 44	10.300
H3048	220	-	8 15/16	133	290	34	46	HML 48	MS30 48	13.200
H3052	240	9 1/2	9 7/16	145	310	34	46	HML 52	MS30 52	15.300
H3056	260	-	######	152	330	38	50	HML 56	MS30 56	17.700
H3060	280	-	######	168	360	42	54	HML 60	MS30 60	22.800
H3064	300	-	######	171	380	42	55	HML 64	MS30 64	24.600
H3068	320	-	######	187	400	45	58	HML 68	MS30 68	28.700
H3072	340	-	######	188	420	45	58	HML 72	MS30 72	30.500
H3076	360	-	######	193	450	48	62	HML 76	MS30 76	35.800
H3080	380	-	-	210	470	52	66	HML 80	MS30 80	41.300
H3084	400	-	-	212	490	52	66	HML 84	MS30 84	43.700
H3088	410	-	-	228	520	60	77	HML 88	MS30 88	65.200
H3092	430	-	-	234	540	60	77	HML 92	MS30 92	69.500
H3096	450	-	-	237	560	60	77	HML 96	MS30 96	73.300
H30/500	470	-	-	247	580	68	85	HML 100	MS30 100	81.800

• Adapter sleeves are supplied complete with lock nuts and lock washers or lock plate plates.
• Adapter for these bores srw designated HE, e.g. HE3024
• Adapter for these bores srw designated HS, e.g. HS3024

Adapter Sleeves

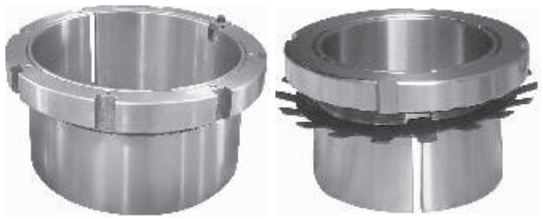

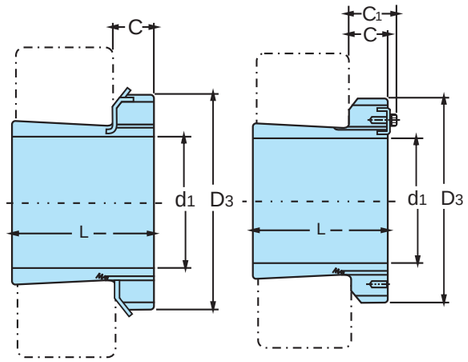

H 39

TAPER 1:12

Adapter Sleeves No.	d1 mm	L mm	D3 mm	C mm	C1 mm	Lock Nuts	Lock Washers and Lock Platea	Weight Kg
H3936	160	87	210	29.5	-	KM 36	MB 36	5.700
H3938	170	89	220	30.5	-	KM 38	MB 38	6.190
H3940	180	98	240	31.5	-	KM 40	MB 40	7.890
H3944	200	96	260	32	41	HM 44	MB 44	8.160
H3948	220	101	290	34	46	HM 48	MB 48	10.700
H3952	240	116	310	34	46	HM 52	MB 52	12.800
H3956	260	121	330	38	50	HM 56	MB 56	14.800
H3960	280	140	360	42	54	HM31 60	MS31 60	19.800
H3964	300	140	380	42	55	HM31 64	MS31 64	21.000
H3968	320	144	400	45	58	HM31 68	MS31 68	23.500
H3972	340	144	420	45	58	HM31 72	MS31 72	24.500
H3976	360	164	450	48	62	HM31 76	MS31 76	31.500
H3980	380	168	470	52	66	HM31 80	MS31 80	35.000
H3984	400	168	490	52	66	HM31 84	MS31 84	36.600
H3988	410	189	520	60	77	HM31 88	MS31 88	57.300
H3992	430	189	540	60	77	HM31 92	MS31 92	59.900
H3996	450	200	560	60	77	HM31 96	MS31 96	64.900
H39/500	470	208	580	68	85	HM31 100	MS31 100	73.100

• Adapter sleeves are supplied complete with lock nuts and lock washers or lock plates.

Hydraullic Adapter Sleeves

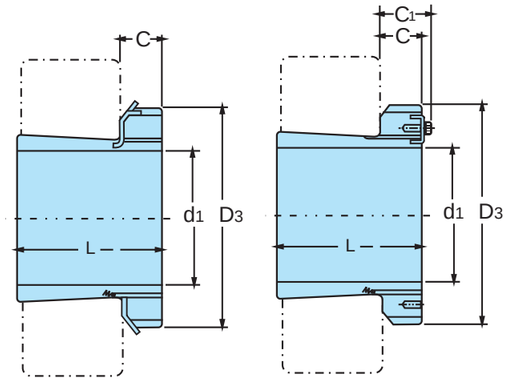

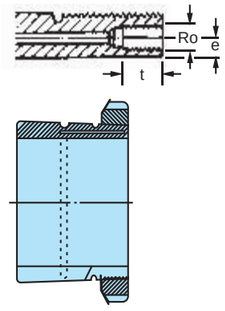

HOH 23
HOH 32

TAPER 1:12

Hydraulic Adapter Sleeves No.	d1 mm	L mm	D3 mm	C mm	C1 mm	RO	e mm	t mm	Lock Nuts	Lock Washers	Weight Kg
HOH 2332	140	147	210	28	-	M6	4.0	7	KM 32	MB 32	9.140
HOH 2334	150	154	220	29	-	M6	4.0	7	KM 34	MB 34	10.200
HOH 2336	160	161	230	30	-	M6	4.0	7	KM 36	MB 36	11.300
HOH 2338	170	169	240	31	-	M6	4.0	7	KM 38	MB 38	12.600
HOH 2340	180	176	250	32	-	M6	4.0	7	KM 40	MB 40	13.900
HOH 2344	200	186	280	32	44	M6	4.0	7	HM 44	MB 44	16.700
HOH 2348	220	199	300	34	46	M6	4.0	7	HM 48	MB 48	19.700
HOH 2352	240	211	330	36	49	M6	4.0	7	HM 52	MB 52	24.200
HOH 2356	260	224	350	38	51	M6	4.0	7	HM 56	MB 56	27.800

Hydraulic Adapter Sleeves No.	d1 mm	L mm	D3 mm	C mm	C1 mm	RO	e mm	t mm	Lock Nuts	Lock Platea	Weight Kg
HOH 3260	280	240	380	40	53	M6	4	7	HM31 60	MS31 60	34.100
HOH 3264	300	258	400	42	56	M6	3.5	7	HM31 64	MS31 64	39.300
HOH 3268	320	288	440	55	72	M6	3.5	7	HM31 68	MS31 68	54.600
HOH 3272	340	299	460	58	75	M6	3.5	7	HM31 72	MS31 72	60.200
HOH 3276	360	310	490	60	77	M6	3.5	7	HM31 76	MS31 76	69.600
HOH 3280	380	328	520	62	82	M6	3.5	7	HM31 80	MS31 80	81.000
HOH 3284	400	352	540	70	90	M6	3.5	7	HM31 84	MS31 84	94.000
HOH 3288	410	361	560	70	90	M8	6.5	12	HM31 88	MS31 88	######
HOH 3292	430	382	580	75	95	M8	6.5	12	HM31 92	MS31 92	######
HOH 3296	450	397	620	75	95	M8	6.5	12	HM31 96	MS31 96	######
HOH32/500	470	428	630	80	100	M8	6.5	12	HM31 100	MS31 100	######

• Indo Steel adapter sleeves are supplied complete with lock nuts and lock washers or lock plates.

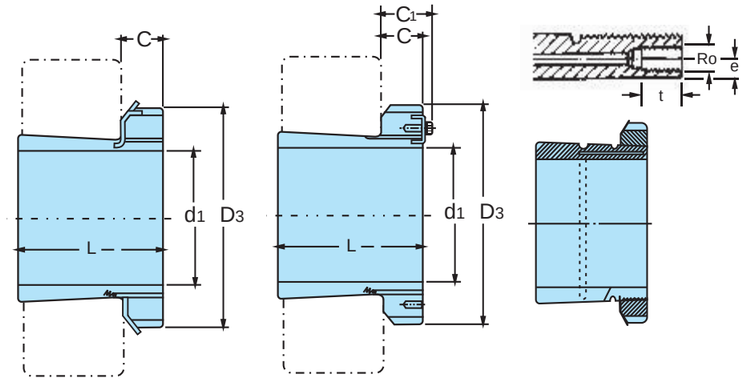

HOH 31

TAPER 1:12

Hydraulic Adapter Sleeves No.	d1 mm	L mm	D3 mm	C mm	C1 mm	RO	e mm	t mm	Lock Nuts	Lock Washers	Weight Kg
HOH 3132	140	119	210	28	-	M6	4.0	7	KM 32	MB 32	7.670
HOH 3134	150	122	220	29	-	M6	4.0	7	KM 34	MB 34	8.380
HOH 3136	160	131	230	30	-	M6	4.0	7	KM 36	MB 36	9.500
HOH 3138	170	141	240	31	-	M6	4.0	7	KM 38	MB 38	10.800
HOH 3140	180	150	250	32	-	M6	4.0	7	KM 40	MB 40	12.100
HOH 3144	200	161	280	32	44	M6	4.0	7	HM31 44	MS31 44	14.700
HOH 3148	220	172	300	34	46	M6	4.0	7	HM31 48	MS31 48	17.300
HOH 3152	240	190	330	36	49	M6	4.0	7	HM31 52	MS31 52	22.000
HOH 3156	260	195	350	38	51	M6	4.0	7	HM31 56	MS31 56	24.500
HOH 3160	280	208	380	40	53	M6	4.0	7	HM31 60	MS31 60	30.200
HOH 3164	300	226	400	42	56	M6	3.5	7	HM31 64	MS31 64	34.900
HOH 3168	320	254	440	55	72	M6	3.5	7	HM31 68	MS31 68	49.500
HOH 3172	340	259	460	58	75	M6	3.5	7	HM31 72	MS31 72	54.200
HOH 3176	360	264	490	60	77	M6	3.5	7	HM31 76	MS31 76	61.700
HOH 3180	380	272	520	62	82	M6	3.5	7	HM31 80	MS31 80	70.600
HOH 3184	400	304	540	70	90	M6	3.5	7	HM31 84	MS31 84	84.200
HOH 3188	410	307	560	70	90	M8	6.5	12	HM31 88	MS31 88	104.000
HOH 3192	430	326	580	75	95	M8	6.5	12	HM31 92	MS31 92	116.000
HOH 3196	450	335	620	75	95	M8	6.5	12	HM31 96	MS31 96	133.000
HOH31/500	470	356	630	80	100	M8	6.5	12	HM31 100	MS31 100	143.000

• Indo Steel adapter sleeves are supplied complete with lock nuts and lock washers or lock plates.

Hydraullic Adapter Sleeves

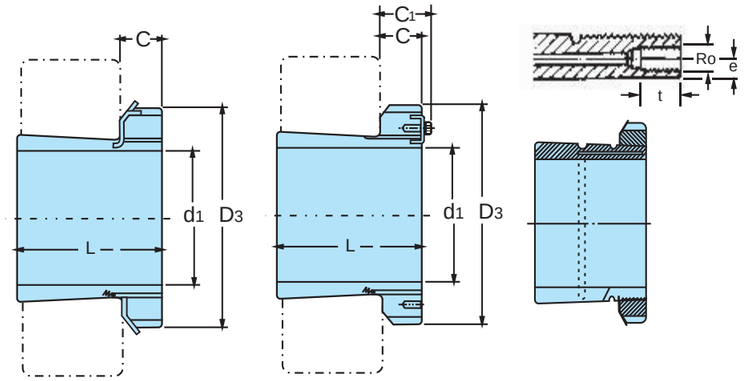

HOH 30

TAPER 1:12

Hydraulic Adapter Sleeves No.	d1 mm	L mm	D3 mm	C mm	C1 mm	RO	e mm	t mm	Lock Nuts	Lock Washers and Lock Platea	Weight Kg
HOH 3032	140	93	190	28	-	M6	4.0	7	KM 32	MB 32	5.210
HOH 3034	150	101	200	29	-	M6	4.0	7	KM 34	MB 34	5.990
HOH 3036	160	109	210	30	-	M6	4.0	7	KM 36	MB 36	6.830
HOH 3038	170	112	220	31	-	M6	4.0	7	KM 38	MB 38	7.450
HOH 3040	180	120	240	32	-	M6	4.0	7	KM 40	MB 40	9.190
HOH 3044	200	126	260	32	41	M6	4.0	7	HM31 44	MS31 44	######
HOH 3048	220	133	290	34	46	M6	4.0	7	HM31 48	MS31 48	######
HOH 3052	240	145	310	34	46	M6	4.0	7	HM31 52	MS31 52	######
HOH 3056	260	152	330	38	50	M6	4.0	7	HM31 56	MS31 56	######
HOH 3060	280	168	360	42	54	M6	4.0	7	HM31 60	MS31 60	######
HOH 3064	300	171	380	42	55	M6	3.5	7	HM31 64	MS31 64	######
HOH 3068	320	187	400	45	58	M6	3.5	7	HM31 68	MS31 68	######
HOH 3072	340	188	420	45	58	M6	3.5	7	HM31 72	MS31 72	######
HOH 3076	360	193	450	48	62	M6	3.5	7	HM31 76	MS31 76	######
HOH 3080	380	210	470	52	66	M6	3.5	7	HM31 80	MS31 80	######
HOH 3084	400	212	490	52	66	M8	3.5	7	HM31 84	MS31 84	######
HOH 3088	410	228	520	60	77	M8	6.5	12	HM31 88	MS31 88	######
HOH 3092	430	234	540	60	77	M8	6.5	12	HM31 92	MS31 92	######
HOH 3096	450	237	560	60	77	M8	6.5	12	HM31 96	MS31 96	######
HOH30/500	470	247	580	68	85	M8	6.5	12	HM31 100	MS31 100	######

• Indo Steel adapter sleeves are supplied complete with lock nuts and lock washers or lock plates.

Hydraullic Adapter Sleeves

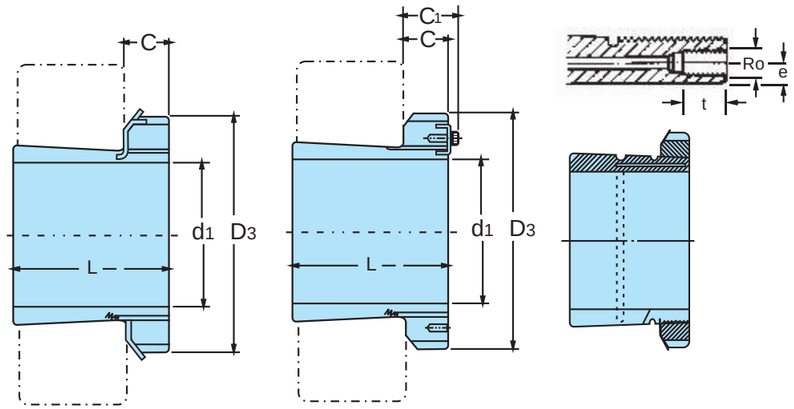

HOH 39

TAPER 1:12

Hydraulic Adapter Sleeves No.	d1 mm	L mm	D3 mm	C mm	C1 mm	RO	e mm	t mm	Lock Nuts	Lock Washers and Lock Platea	Weight Kg
HOH 3936	160	87	210	29.5	-	M6	4.0	7	KM 36	MB 36	5.700
HOH 3938	170	89	220	30.5	-	M6	4.0	7	KM 38	MB 38	6.190
HOH 3940	180	98	240	31.5	-	M6	4.0	7	KM 40	MB 40	7.890
HOH 3944	200	96	260	32	41	M6	4.0	7	HM31 44	MS31 44	8.160
HOH 3948	220	101	290	34	46	M6	4.0	7	HM31 48	MS31 48	10.700
HOH 3952	240	116	310	34	46	M6	4.0	7	HM31 52	MS31 52	12.800
HOH 3956	260	121	330	38	50	M6	4.0	7	HM31 56	MS31 56	14.800
HOH 3960	280	140	360	42	54	M6	4.0	7	HM31 60	MS31 60	19.800
HOH 3964	300	140	380	42	55	M6	3.5	7	HM31 64	MS31 64	21.000
HOH 3968	320	144	400	45	58	M6	3.5	7	HM31 68	MS31 68	23.500
HOH 3972	340	144	420	45	58	M6	3.5	7	HM31 72	MS31 72	24.200
HOH 3976	360	164	450	48	62	M6	3.5	7	HM31 76	MS31 76	31.500
HOH 3980	380	168	470	52	66	M6	3.5	7	HM31 80	MS31 80	35.000
HOH 3984	400	168	490	52	66	M8	3.5	7	HM31 84	MS31 84	36.600
HOH 3988	410	189	520	60	77	M8	6.5	12	HM31 88	MS31 88	57.300
HOH 3992	430	189	540	60	77	M8	6.5	12	HM31 92	MS31 92	59.900
HOH 3996	450	200	560	60	77	M8	6.5	12	HM31 96	MS31 96	64.900
HOH 39/500	470	208	580	68	85	M8	6.5	12	HM31 100	MS31 100	73.100

• Indo Steel adapter sleeves are supplied complete with lock nuts and lock washers or lock plates.

Withdrawal Sleeves

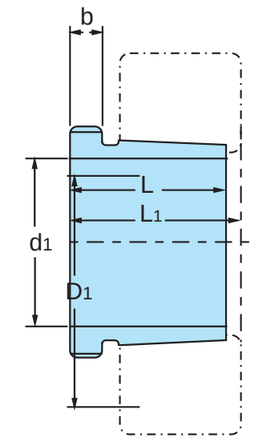

AH 2

TAPER 1:12

Withdrawal Sleeves No.	d1 mm	L mm	L1 mm	b mm	Thread D1 mm	Appropriate Withdrawal Nut No.	Weight Kg
AH208	35	25	27	6	M 45 x 1.5	KM 09	0.174
AH209	40	26	29	6	M 50 x 1.5	KM 10	0.227
AH210	45	28	31	7	M 55 x 2	KM 11	0.740
AH211	50	29	32	7	M 60 x 2	KM 12	0.308
AH212	55	32	35	8	M 65 x 2	KM 13	0.346
AH213	60	32.5	36	8	M 75 x 2	KM 15	0.401
AH214	65	33.5	37	8	M 80 x 2	KM 16	0.593
AH215	70	34.5	38	8	M 85 x 2	KM 17	0.707
AH216	75	35.5	39	8	M 90 x 2	KM 18	0.882
AH217	80	38.5	42	9	M 95 x 2	KM 19	1.020
AH218	85	40	44	9	M 100 x 2	KM 20	1.190
AH219	90	43	47	10	M 105 x 2	KM 21	1.370
AH220	95	45	49	10	M 110 x 2	KM 22	1.490
AH222	105	50	54	11	M 120 x 2	KM 24	1.930

• Dimension L1 decreases as the withdrawal sleeve is driven in during mounting.

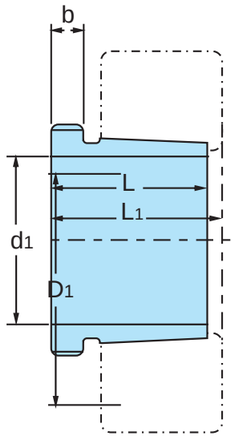

AH 3

TAPER 1:12

Withdrawal Sleeves No.	d1 mm	L mm	L1 mm	b mm	Thread D1 mm	Appropriate Withdrawal Nut No.	Weight Kg
AH308	35	29	32	6	M 45 x 1.5	KM 09	0.090
AH309	40	31	34	6	M 50 x 1.5	KM 10	0.109
AHX310	45	35	38	7	M 55 x 2	KM 11	0.137
AHX311	50	37	40	7	M 60 x 2	KM 12	0.161
AH312	55	40	43	8	M 65 x 2	KM 13	0.189
AH313	60	42	45	8	M 75 x 2	KM 15	0.253
AH314	65	43	47	8	M 80 x 2	KM 16	0.280
AH315	70	45	49	8	M 85 x 2	KM 17	0.313
AH316	75	48	52	8	M 90 x 2	KM 18	0.365
AHX317	80	52	56	9	M 95 x 2	KM 19	0.429
AHX318	85	53	57	9	M 100 x 2	KM 20	0.461
AHX319	90	57	61	10	M 105 x 2	KM 21	0.532
AHX320	95	59	63	10	M 110 x 2	KM 22	0.582
AHX322	105	63	67	12	M 120 x 2	KM 24	0.663

- Dimension L1 decreases as the withdrawal sleeve is driven in during mounting.
- M means metric thread. Tr means 30', trapezoid and the digits are outside diameter of thread and pitch.

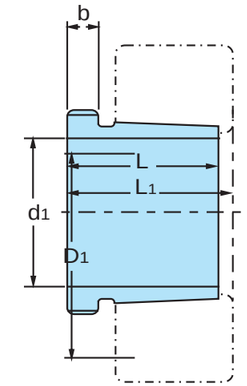

AH 23

TAPER 1:12

Withdrawal Sleeves No.	d1 mm	L mm	L1 mm	b mm	Thread D1 mm	Appropriate Withdrawal Nut No.	Weight Kg
AH2308	35	40	43	7	M 45 x 1.5	KM 09	0.128
AH2309	40	44	47	7	M 50 x 1.5	KM 10	0.164
AHX2310	45	50	53	9	M 55 x 2	KM 11	0.209
AHX2311	50	54	57	10	M 60 x 2	KM 12	0.253
AHX2312	55	58	61	11	M 65 x 2	KM 13	0.297
AH2313	60	61	64	12	M 75 x 2	KM 15	0.395
AHX2314	65	64	68	12	M 80 x 2	KM 16	0.466
AHX2315	70	68	72	12	M 85 x 2	KM 17	0.534
AHX2316	75	71	75	12	M 90 x 2	KM 18	0.597
AHX2317	80	74	78	13	M 95 x 2	KM 19	0.670
AHX2318	85	79	83	14	M 100 x 2	KM 20	0.779
AHX2319	90	85	89	16	M 105 x 2	KM 21	0.886
AHX2320	95	90	94	16	M 110 x 2	KM 22	0.998
AHX2322	105	98	102	16	M 125 x 2	KM 25	1.350
AHX2324	115	105	109	17	M 135 x 2	KM 27	1.600
AHX2326	125	115	119	19	M 145 x 2	KM 29	1.970
AHX2328	135	125	130	20	M 155 x 2	KM 31	2.330
AHX2330	145	135	140	24	M 165 x 2	KM 33	2.820
AH2332	150	140	146	24	M 180 x 3	KM 36	4.720
AH2334	160	146	152	24	M 190 x 3	KM 38	5.250
AH2336	170	154	160	26	M 200 x 3	KM 40	5.830
AH2338	180	160	167	26	M 210 x 4	HM 42	6.630
AH2340	190	170	177	30	M 220 x 4	HM 44	7.540
AH2344	200	181	189	30	M 240 x 4	HM 48	13.500
AH2348	220	189	197	30	M 260 x 4	HM 52	15.500
AH2352	240	205	213	30	M 290 x 4	HM 58	19.600
AH2356	260	212	220	30	M 310 x 5	HM 62	21.600

- Dimension L1 decreases as the withdrawal sleeve is driven in during mounting.
- M means metric thread. Tr means 30', trapezoid and the digits are outside diameter of thread and pitch.

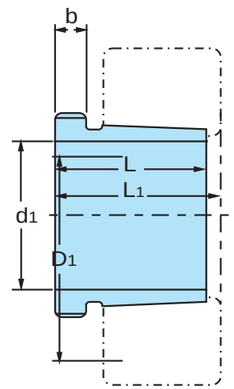

AH 23

TAPER 1:12

Withdrawal Sleeves No.	d1 mm	L mm	L1 mm	b mm	Thread D1 mm	Appropriate Withdrawal Nut No.	Weight Kg
AHX3120	95	64	68	11	M 110 x 2	KM 22	0.650
AHX3122	105	68	72	11	M 125 x 2	KM 25	0.760
AHX3124	115	75	79	12	M 135 x 2	KM 27	0.950
AHX3126	125	78	82	12	M 145 x 2	KM 29	1.080
AHX3128	135	83	88	14	M 155 x 2	KM 31	1.280
AHX3130	145	96	101	15	M 165 x 2	KM 33	1.790
AH3132	150	103	108	16	M 180 x 3	KM 36	3.210
AH3134	160	104	109	16	M 190 x 3	KM 38	3.400
AH3136	170	116	122	19	M 200 x 3	KM 40	4.220
AH3138	180	125	131	20	M 210 x 4	HM 42	4.890
AH3140	190	134	140	21	M 220 x 4	HM 44	5.490
AH3144	200	145	151	23	M 240 x 4	HM 48	10.400
AH3148	220	154	161	25	M 260 x 4	HM 52	12.000
AH3152	240	172	179	26	M 290 x 4	HM 58	16.200
AH3156	260	175	183	28	M 310 x 5	HM 62	17.500
AH3160	280	192	200	30	M 330 x 5	HM 66	20.800
AH3164	300	209	217	31	M 350 x 5	HM 70	24.500
AH3168	320	225	234	33	M 370 x 5	HM 74	29.000
AH3172	340	229	238	35	M 400 x 5	HM 80	33.000
AH3176	360	232	242	36	M 420 x 5	HM 84	35.700
AH3180	380	240	250	38	M 440 x 5	HM 88	39.700
AH3184	400	266	276	40	M 460 x 5	HM 92	46.500
AHX3188	420	270	281	42	M 480 x 5	HM 96	49.800
AHX3192	440	285	296	43	M 510 x 6	HM 102	57.900
AHX3196	460	295	307	45	M 530 x 6	HM 106	63.100
AHX31/500	480	313	325	47	M 550 x 6	HM 110	70.900

- Dimension L1 decreases as the withdrawal sleeve is driven in during mounting.
- M means metric thread. Tr means 30’, trapezoid and the digits are outside diameter of thread and pitch.

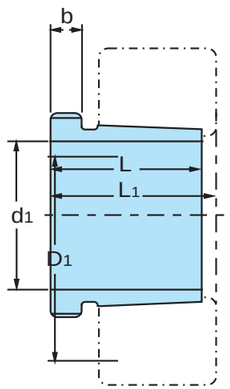

AH 32

TAPER 1:12

Withdrawal Sleeves No.	d1 mm	L mm	L1 mm	b mm	Thread D1 mm	Appropriate Withdrawal Nut No.	Weight Kg
AHX3218	85	63	67	10	M 100 x 2	KM 20	0.576
AHX3220	95	73	77	11	M 110 x 2	KM 22	0.767
AHX3222	105	82	86	11	M 125 x 2	KM 25	1.040
AHX3224	115	90	94	13	M 135 x 2	KM 27	1.300
AHX3226	125	98	102	15	M 145 x 2	KM 29	1.580
AHX3228	135	104	109	15	M 155 x 2	KM 31	1.840
AHX3230	145	114	119	17	M 165 x 2	KM 33	2.220
AH3232	150	124	130	20	M 180 x 3	KM 36	4.080
AH3234	160	134	140	24	M 190 x 3	KM 38	4.800
AH3236	170	140	146	24	M 200 x 3	KM 40	5.320
AH3238	180	145	152	25	M 210 x 3	HM 42	5.900
AH3240	190	153	160	25	M 220 x 4	HM 44	6.680
AH3260	280	228	236	34	M 330 x 5	HM 66	26.000
AH3264	300	246	254	36	M 350 x 5	HM 70	30.600
AH3268	320	264	273	38	M 370 x 5	HM 74	35.800
AH3272	340	274	283	40	M 400 x 5	HM 80	41.600
AH3276	360	284	294	42	M 420 x 5	HM 84	46.300
AH3280	380	302	312	44	M 440 x 5	HM 88	52.500
AHX3284	400	321	331	46	M 460 x 5	HM 92	59.700
AHX3288	420	330	341	48	M 480 x 5	HM 96	64.800
AHX3292	440	349	360	50	M 510 x 6	HM 102	75.200
AHX3296	460	364	376	52	M 530 x 6	HM 106	83.100
AHX32/500	480	393	405	54	M 550 x 6	HM 110	94.700

- Dimension L1 decreases as the withdrawal sleeve is driven in during mounting.
- M means metric thread. Tr means 30’, trapezoid and the digits are outside diameter of thread and pitch.

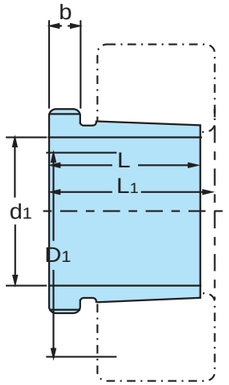

AH 22

TAPER 1:12

Withdrawal Sleeves No.	d1 mm	L mm	L1 mm	b mm	Thread D1 mm	Appropriate Withdrawal Nut No.	Weight Kg
AH2236	170	105	110	17	M 200 x 3	HM 40	3.730
AH2238	180	112	117	18	M 210 x 4	HM 42	4.250
AH2240	190	118	123	19	M 220 x 4	HM 44	4.680
AH2244	200	130	136	20	M 240 x 4	HM 48	9.100
AH2248	220	144	150	21	M 260 x 4	HM 52	11.100
AH2252	240	155	161	23	M 290 x 4	HM 58	14.000
AH2256	260	155	163	24	M 310 x 5	HM 62	15.200
AH2260	280	170	178	26	M 330 x 5	HM 66	18.100
AH2264	300	180	190	27	M 350 x 5	HM 70	20.200

- Dimension L1 decreases as the withdrawal sleeve is driven in during mounting.
- M means metric thread. Tr means 30’, trapezoid and the digits are outside diameter of thread and pitch.

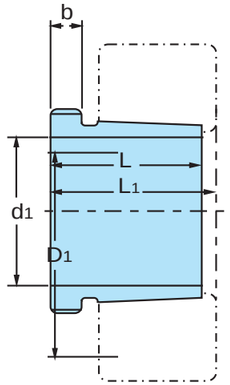

AH 30

TAPER 1:12

Withdrawal Sleeves No.	d1 mm	L mm	L1 mm	b mm	Thread D1 mm	Appropriate Withdrawal Nut No.	Weight Kg
AH3024	115	60	64	13	M 130 x 2	KM 26	0.750
AH3026	125	67	71	14	M 140 x 2	KM 28	0.930
AH3028	135	68	73	14	M 150 x 2	KM 30	1.010
AH3030	145	72	77	15	M 160 x 2	KM 32	1.150
AH3032	150	77	82	16	M 170 x 3	KM 34	2.060
AH3034	160	85	90	17	M 180 x 3	KM 36	2.430
AH3036	170	92	98	17	M 190 x 3	KM 38	2.810
AH3038	180	96	102	18	Tr 205 x 4	HML 41	2.320
AH3040	190	102	108	19	Tr 215 x 4	HML 43	3.800
AH3044	200	111	117	20	Tr 235 x 4	HML 47	7.400
AH3048	220	116	123	21	Tr 260 x 4	HML 52	8.750
AH3052	240	128	135	23	Tr 280 x 4	HML 56	10.700
AH3056	260	131	139	24	Tr 300 x 5	HML 60	12.000
AH3060	280	145	153	26	Tr 320 x 5	HML 64	14.400
AH3064	300	149	157	27	Tr 345 x 5	HML 69	16.000
AH3068	320	162	171	28	Tr 365 x 5	HML 73	19.500
AH3072	340	167	176	30	Tr 385 x 5	HML 77	21.000
AH3076	360	170	180	31	Tr 410 x 5	HML 82	23.200
AH3080	380	183	193	33	Tr 430 x 5	HML 86	27.300
AH3084	400	186	196	34	Tr 450 x 5	HML 90	29.000
AH3088	420	194	205	35	Tr 470 x 5	HML 94	32.000
AH3092	440	202	213	37	Tr 490 x 6	HML 98	35.200
AH3096	460	205	217	38	Tr 520 x 6	HML 104	39.200
AH30/500	480	209	221	40	Tr 540 x 6	HML 108	42.500

- Dimension L1 decreases as the withdrawal sleeve is driven in during mounting.
- M means metric thread. Tr means 30’, trapezoid and the digits are outside diameter of thread and pitch.

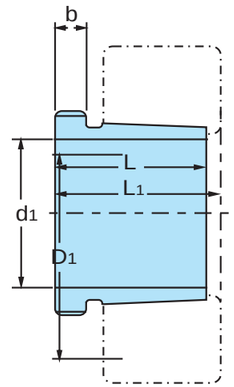

AH 240

TAPER 1:30

Withdrawal Sleeves No.	d1 mm	L mm	L1 mm	b mm	Thread D1 mm	Appropriate Withdrawal Nut No.	Weight Kg
AH24024	115	73	82	13	M 125 x 2	KM 25	0.650
AH24026	125	83	93	14	M 135 x 2	KM 27	0.840
AH24028	135	83	93	14	M 145 x 2	KM 29	0.910
AH24030	145	90	101	15	M 155 x 2	KM 31	1.040
AH24032	150	95	106	15	M 170 x 3	KM 34	2.330
AH24034	160	106	117	16	M 180 x 3	KM 36	2.800
AH24036	170	116	127	16	M 190 x 3	KM 38	3.100
AH24038	180	118	131	18	M 200 x 3	HM 40	3.500
AH24040	190	127	140	18	Tr 210 x 4	HM 42	3.930
AH24044	200	138	152	20	Tr 230 x 4	HM 46	8.250
AH24048	220	138	153	20	Tr 250 x 4	HM 50	9.000
AH24052	240	162	178	22	Tr 270 x 4	HM 54	11.800
AH24056	260	162	179	22	Tr 290 x 5	HM 58	12.800
AH24060	280	184	202	24	Tr 310 x 5	HM 62	15.500
AH24064	300	184	202	24	Tr 330 x 5	HM 66	16.600
AH24068	320	206	225	26	Tr 360x 5	HML 72	21.700
AH24072	340	206	226	26	Tr 380 x 5	HML 76	22.700
AH24076	360	208	228	28	Tr 400 x 5	HML 80	23.700
AH24080	380	228	248	28	Tr 420 x 5	HML 84	27.100
AH24084	400	230	252	30	Tr 440 x 5	HML 88	29.000
AH24088	420	242	264	30	Tr 460 x 5	HML 92	31.900
AH24092	440	250	273	32	Tr 480 x 6	HML 96	34.700
AH24096	460	250	273	32	Tr 500 x 6	HML 100	36.600
AH240/500	480	256	276	35	Tr 530 x 6	HML 106	41.700

- Dimension L1 decreases as the withdrawal sleeve is driven in during mounting.
- M means metric thread. Tr means 240', trapezoid and the digits are outside diameter of thread and pitch.

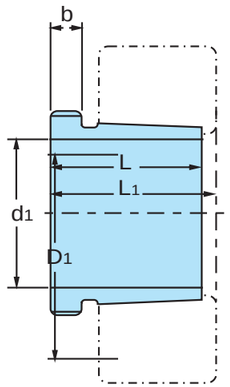

AH 241

TAPER 1:30

Withdrawal Sleeves No.	d1 mm	L mm	L1 mm	b mm	Thread D1 mm	Appropriate Withdrawal Nut No.	Weight Kg
AH 24122	105	82	91	13	M 115 x 2	KM 23	0.73
AH 24124	115	93	102	13	M 130 x 2	KM 26	1.000
AH 24126	125	94	104	14	M 140 x 2	KM 28	1.110
AH 24128	135	99	109	14	M 150 x 2	KM 30	1.250
AH 24130	145	115	126	15	M 160 x 2	KM 32	1.560
AH 24132	150	124	135	15	M 170 x 3	KM 34	3.000
AH 24134	160	125	136	16	M 180 x 3	KM 36	3.210
AH 24136	170	134	145	16	M 190 x 3	KM 38	3.680
AH 24138	180	146	159	18	M 200 x 3	KM 40	4.280
AH 24140	190	158	171	18	Tr 210 x 4	HM 42	5.100
AH 24144	200	170	184	20	Tr 230 x 4	HM 46	10.200
AH 24148	220	180	195	20	Tr 260 x 4	HM 52	12.500
AH 24152	240	202	218	22	Tr 280 x 4	HM 56	15.400
AH 24156	260	202	219	22	Tr 300 x 5	HM 60	16.300
AH 24160	280	224	242	24	Tr 320 x 5	HM 64	19.500
AH 24164	300	242	260	24	Tr 340 x 5	HM 68	21.400
AH 24168	320	269	288	26	Tr 360 x 5	HM 72	27.100
AH 24172	340	269	289	26	Tr 380 x 5	HM 76	29.600
AH 24176	360	271	291	28	Tr 400 x 5	HM 80	31.300
AH 24180	380	278	298	28	Tr 420 x 5	HM 84	34.300
AH 24184	400	310	332	30	Tr 440 x 5	HM 88	40.300
AH 24188	420	310	332	30	Tr 460 x 5	HM 92	42.300
AH 24192	440	332	355	32	Tr 480 x 6	HM 96	47.600
AH 24196	460	340	363	32	Tr 500 x 6	HM 100	52.700
AH 241/500	480	360	383	35	Tr 530 x 6	HM 106	59.100

- Dimension L1 decreases as the withdrawal sleeve is driven in during mounting.
- M means metric thread. Tr means 240', trapezoid and the digits are outside diameter of thread and pitch.

Withdrawal Sleeves

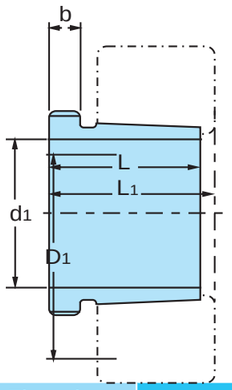

AH 39

TAPER 1:12

Withdrawal Sleeves No.	d1 mm	L mm	L1 mm	b mm	Thread D1 mm	Appropriate Withdrawal Nut No.	Weight Kg
AH 3936	170	66	71	13	M 190 x 3	KM 38	1.910
AH 3938	180	66	71	13	M 200 x 3	KM 40	2.020
AH 3940	190	77	83	16	Tr 210 x 4	HM 42	2.619
AH 3944	200	77	83	16	Tr 230 x 4	HM 46	4.830
AH 3948	220	77	83	16	Tr 250 x 4	HM 50	5.290
AH 3952	240	94	100	18	Tr 270 x 4	HM 54	7.060
AH 3956	260	94	100	18	Tr 290 x 5	HM 58	7.700
AH 3960	280	112	119	21	Tr 310 x 5	HM 62	10.100
AH 3964	300	112	119	21	Tr 330 x 5	HM 66	10.800
AH 3968	320	112	119	21	Tr 360 x 5	HM 72	12.400
AH 3972	340	112	119	21	Tr 380 x 5	HM 76	13.100
AH 3976	360	130	138	22	Tr 400 x 5	HM 80	15.900
AH 3980	380	130	138	22	Tr 420 x 5	HM 84	17.200
AH 3984	400	130	138	22	Tr 440 x 5	HM 88	18.100
AH 3988	420	145	153	25	Tr 460 x 5	HM 92	21.500
AH 3992	440	145	153	25	Tr 480 x 6	HM 96	22.500
AH 3996	460	158	167	28	Tr 500 x 6	HM 100	26.000
AH 39/500	480	162	172	32	Tr 530 x 6	HM 106	30.100

- Dimension L1 decreases as the withdrawal sleeve is driven in during mounting.
- M means metric thread. Tr means 240', trapezoid and the digits are outside diameter of thread and pitch.

Lock Nuts

Lock Washers

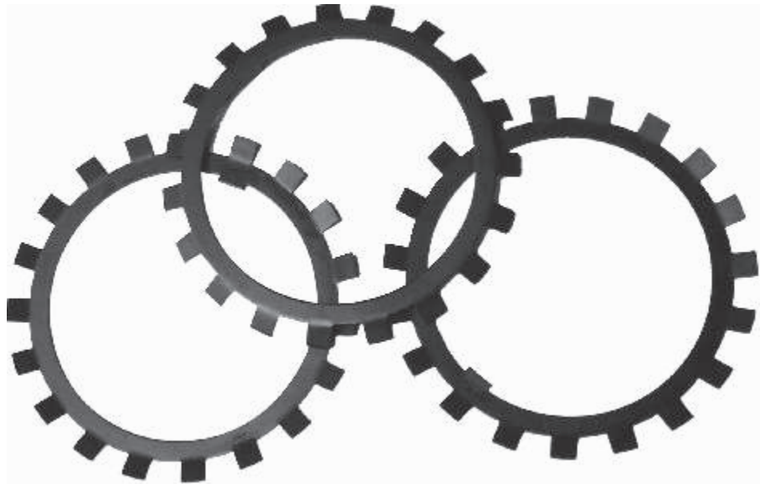

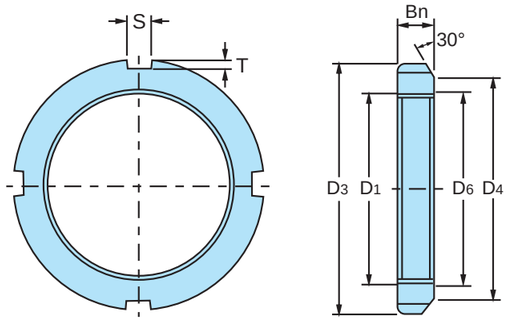

KM
AN

Lock Nuts No.	D1 Thread	D3 mm	D4 mm	Bn mm	S mm	T mm	D6 mm	Weight Kg	Lock Washers No.
KM00	M10 x 0.75	18	13	4	3	2	10.5	0.005	MB 00
KM01	M12 x 1	22	17	4	3	2	12.5	0.007	MB 01
KM02	M15 x 1	25	21	5	4	2	15.5	0.01	MB 02
KM03	M17 x 1	28	24	5	4	2	17.5	0.013	MB 03
KM04	M20 x 1	32	26	6	4	2	20.5	0.019	MB 04
KM05	M25 x 1.5	38	32	7	5	2	25.8	0.025	MB 05
KM06	M30 x 1.5	45	38	7	5	2	30.8	0.043	MB 06
KM07	M35 x 1.5	52	44	8	5	2	35.8	0.053	MB 07
KM08	M40 x 1.5	58	50	9	6	2.5	40.8	0.085	MB 08
KM09	M45 x 1.5	65	56	10	6	2.5	45.8	0.119	MB 09
KM10	M50 x 1.5	70	61	11	6	2.5	50.8	0.148	MB 10
KM11	M55 x 2	75	67	11	7	3	56	0.158	MB 11
KM12	M60 x 2	80	73	11	7	3	61	0.174	MB 12
KM13	M65 x 2	85	79	12	7	3	66	0.203	MB 13
KM14	M70 x 2	92	85	12	8	3.5	71	0.242	MB 14
KM15	M75 x 2	98	90	13	8	3.5	76	0.287	MB 15
KM16	M80 x 2	105	95	15	8	3.5	81	0.397	MB 16
KM17	M85 x 2	110	102	16	8	3.5	86	0.451	MB 17
KM18	M90 x 2	120	108	16	10	4	91	0.556	MB 18
KM19	M95 x 2	125	113	17	10	4	96	0.658	MB 19
KM20	M100 x 2	130	120	18	10	4	101	0.698	MB 20
KM21	M105 x 2	140	126	18	12	5	106	0.845	MB 21
KM22	M110 x 2	145	133	19	12	5	111	0.965	MB 22
KM23	M115 x 2	150	137	19	12	5	116	1.01	MB 23
KM24	M120 x 2	155	138	20	12	5	121	1.08	MB 24
KM25	M125 x 2	160	148	21	12	5	126	1.19	MB 25
KM26	M130 x 2	165	149	21	12	5	131	1.25	MB 26
KM27	M135 x 2	175	160	22	14	6	136	1.55	MB 27
KM28	M140 x 2	180	160	22	14	6	141	1.56	MB 28

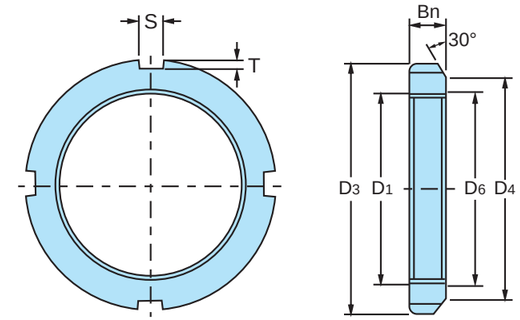

KM
AN

Lock Nuts No.	D1 Threads	D3 mm	D4 mm	Bn mm	S mm	T mm	D6 mm	Weight Kg	Lock Washers No.
KM29	M145 x 2.0	190	171	24	14	6	146	2.000	MB 29
KM30	M150 x 2.0	195	171	24	14	6	151	2.030	MB 30
KM31	M155 x 3.0	200	182	25	16	7	156.5	2.210	MB 31
KM32	M160 x 3.0	210	182	25	16	7	161.5	2.590	MB 32
KM33	M165 x 3.0	210	193	26	16	7	166.5	2.430	MB 33
KM34	M170 x 3.0	220	193	26	16	7	171.5	2.800	MB 34
KM36	M180 x 3.0	230	203	27	18	8	181.5	3.070	MB 36
KM38	M190 x 3.0	240	214	28	18	8	191.5	3.390	MB 38
KM40	M200 x 3.0	250	226	29	18	8	201.5	3.690	MB 40

• M means metric thread and the digits are major diameter of thread and pitch.
NOTE: The speci?cation of KM can be applied for AN.

KML
ANL

Lock Nuts No.	D1 Threads	D3 mm	D4 mm	Bn mm	S mm	T mm	D6 mm	Weight Kg	Lock Washers No.
KML24	M120 x 2	145	133	20	12	5	121	0.78	MBL 24
KML26	M130 x 2	155	143	21	12	5	131	0.88	MBL 26
KML28	M140 x 2	165	151	22	14	6	141	0.99	MBL 28
KML30	M150 x 2	180	164	24	14	6	151	1.38	MBL 30
KML32	M160 x 3	190	174	25	16	7	162	1.56	MBL 32
KML34	M170x 3	200	184	26	16	7	172	1.72	MBL 34
KML36	M180 x 3	210	192	27	18	8	182	1.95	MBL 36
KML38	M190 x 3	220	202	28	18	8	192	2.08	MBL 38
KML40	M200 x 3	240	218	29	18	8	202	2.98	MBL 40

• M means metric thread and the digits are major diameter of thread and pitch.
NOTE: The speci?cation of KML can be applied for ANL.

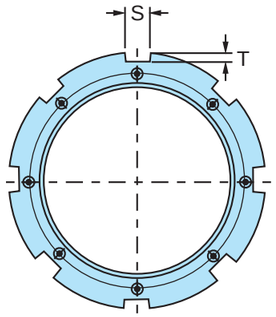

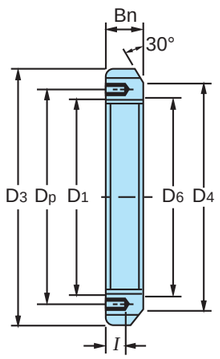

HM31

Lock Nuts No.	D1 Threads	D3 mm	D4 mm	S mm	T mm	D6 mm	Bn mm	i mm	Tapped Holes Threats	Dp mm	Suitable Lock plates No.	Weight Kg.
HM3144	Tr 220 x 4	280	250	20	10	222	32	15	M 8 x 1.25	238	MS3144	5.20
HM3148	Tr 240 x 4	300	270	20	10	242	34	15	M 8 x 1.25	258	MS3148	5.95
HM3152	Tr 260 x 4	330	300	24	12	262	36	18	M 10 x 1.5	281	MS3152	8.05
HM3156	Tr 280 x 4	350	320	24	12	282	38	18	M 10 x 1.5	301	MS3156	9.05
HM3160	Tr 300 x 4	380	340	24	12	302	40	18	M 10 x 1.5	326	MS3160	11.80
HM3164	Tr 320 x 5	400	360	24	12	323	42	18	M 10 x 1.5	345	MS3164	13.10
HM3168	Tr 340 x 5	440	400	28	15	343	55	21	M 12 x 1.75	372	MS3168	23.10
HM3172	Tr 360 x 5	460	420	28	15	363	58	21	M 12 x 1.75	392	MS3172	25.10
HM3176	Tr 380 x 5	490	450	32	18	383	60	21	M 12 x 1.75	414	MS3176	30.90
HM3180	Tr 400 x 5	520	470	32	18	403	62	27	M 16 x 2	439	MS3180	36.90
HM3184	Tr 420 x 5	540	490	32	18	423	70	27	M 16 x 2	459	MS3184	43.50
HM3188	Tr 440 x 5	560	510	36	20	443	70	27	M 16 x 2	477	MS3188	45.30
HM3192	Tr 460 x 5	580	540	36	20	463	75	27	M 16 x 2	497	MS3192	50.40
HM3196	Tr 480 x 5	620	560	36	20	483	75	27	M 16 x 2	527	MS3196	62.20
HM31100	Tr 500 x 5	630	580	40	23	503	80	27	M 16 x 2	539	MS31100	63.30

• Tr means 30’ thread and the digits are major diameter of thread and pitch.

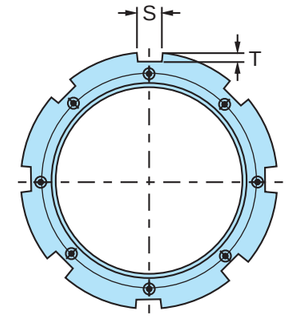

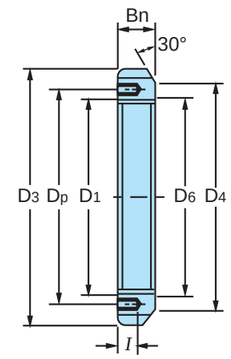

HM30

Lock Nuts No.	D1 Threads	D3 mm	D4 mm	S mm	T mm	D6 mm	Bn mm	i mm	Tapped Holes Threads	Dp mm	Suitable Lock plates No.	Weight Kg.
HM3044	Tr 220 x 4	260	242	20	9	222	30	12	M 6 x 1	229	MS 3044	3.09
HM3048	Tr 240 x 4	290	270	20	10	242	34	15	M 8 x 1.25	253	MS 3048	5.16
HM3052	Tr 260 x 4	310	290	20	10	262	34	15	M 8 x 1.25	273	MS 3052	5.67
HM3056	Tr 280 x 4	330	310	24	10	282	38	15	M 8 x 1.25	293	MS 3056	6.78
HM3060	Tr 300 x 4	360	336	24	12	302	42	15	M 8 x 1.25	316	MS 3060	9.62
HM3064	Tr 320 x 5	380	356	24	12	322.5	42	15	M 8 x 1.25	335	MS 3064	9.94
HM3068	Tr 340 x 5	400	376	24	12	342.5	45	15	M 8 x 1.25	355	MS 30 68	11.70
HM3072	Tr 360 x 5	420	394	28	13	362.5	45	15	M 8 x 1.25	374	MS 3072	12.00
HM3076	Tr 380 x 5	450	422	28	14	382.5	48	18	M 10 x 1.5	398	MS 3076	14.90
HM3080	Tr 400 x 5	470	442	28	14	402.5	52	18	M 10 x 1.5	418	MS 3080	16.90
HM3084	Tr 420 x 5	490	462	32	14	422.5	52	18	M 10 x 1.5	438	MS 3084	17.40
HM3088	Tr 440 x 5	520	490	32	15	442.5	60	21	M 12 x 1.75	462	MS 3088	26.20
HM3092	Tr 460 x 5	540	510	32	15	462.5	60	21	M 12 x 1.75	482	MS 3092	29.60
HM3096	Tr 480 x 5	560	530	36	15	482.5	60	21	M 12 x 1.75	502	MS 3096	28.30
HM30100	Tr 500 x 5	580	550	36	15	502.5	68	21	M 12 x 1.75	522	MS 30100	33.60

• Tr means 30’ thread and the digits are major diameter of thread and pitch.

Lock Nuts

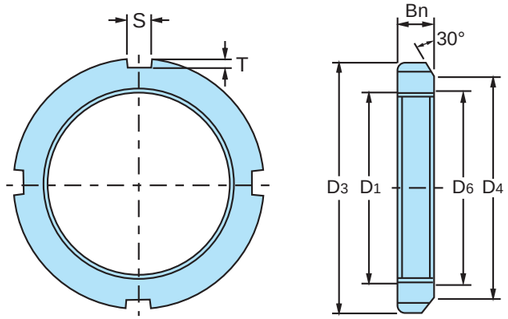

HM
HN

Lock Nuts No.	D1 Threads	D3 mm	D4 mm	Bn mm	S mm	T mm	D6 mm	Weight Kg
HM42	Tr210 x 4	270	238	30	20	10	212	4.75
HM44	Tr220 x 4	280	250	32	20	10	222	5.35
HM46	Tr230 x 4	290	260	34	20	10	232	5.80
HM48	Tr240 x 4	300	270	34	20	10	242	6.20
HM50	Tr250 x 4	320	290	36	20	10	252	7.00
HM52	Tr260 x 4	330	300	36	24	12	262	8.55
HM54	Tr270 x 4	340	310	38	24	12	272	9.20
HM56	Tr280 x 4	350	320	38	24	12	282	10.00
HM58	Tr290 x 4	370	330	40	24	12	292	11.80
HM60	Tr300 x 4	380	340	40	24	12	302	12.00
HM62	Tr310 x 5	390	350	42	24	12	312.5	13.40
HM64	Tr320 x 5	400	360	42	24	12	322.5	20.40
HM66	Tr330 x 5	420	380	52	28	15	332.5	24.50
HM68	Tr340 x 5	440	400	55	28	15	342.5	25.20
HM70	Tr350 x 5	450	410	55	28	15	352.5	27.50
HM72	Tr360 x 5	460	420	58	28	15	362.5	28.20
HM74	Tr370 x 5	470	430	58	28	15	372.5	33.50
HM76	Tr380 x 5	490	450	60	32	18	382.5	40.00
HM80	Tr400 x 5	520	470	62	32	18	402.5	46.90
HM84	Tr420 x 5	540	490	70	32	18	422.5	48.50
HM88	Tr440 x 5	560	510	70	36	20	442.5	55.00
HM92	Tr460 x 5	580	540	75	36	20	462.5	67.00
HM96	Tr480 x 5	620	560	75	36	20	482.5	69.00
HM100	Tr500 x 5	630	590	80	40	23	502.5	75.00
HM102	Tr510 x 6	650	590	80	40	23	513	78.00
HM106	Tr530 x 6	670	610	80	40	23	533	92.50
HM110	Tr550 x 6	700	640	80	40	23	553	148.00

• Tr means 30’ thread and the digits are major diameter of thread and pitch.
NOTE: The speci?cation of HM can be applied for HN.

Lock Nuts

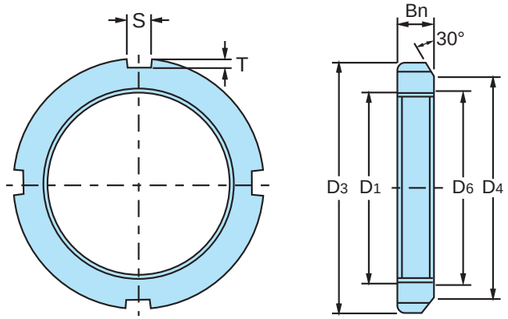

HML
HNL

Lock Nuts No.	D1 Threads	D3 mm	D4 mm	Bn mm	S mm	T mm	D6 mm	Weight Kg
HML41	Tr205 x 4	250	232	30	18	8	207	3.43
HML43	Tr215 x 4	260	242	30	20	9	217	3.72
HML47	Tr235 x 4	280	262	34	20	9	237	4.60
HML52	Tr260 x 4	310	290	34	20	10	262	5.80
HML56	Tr280 x 4	330	310	38	24	10	282	6.72
HML60	Tr300 x 4	360	336	42	24	12	302	9.60
HML64	Tr320 x 5	380	356	42	24	12	322.5	10.30
HML69	Tr345 x 5	410	384	45	28	13	347.5	11.50
HML72	Tr360 x 5	420	394	45	28	13	362.5	12.10
HML73	Tr365 x 5	430	404	48	28	13	367.5	14.20
HML76	Tr380 x 5	450	422	48	28	14	382.5	16.00
HML77	Tr385 x 5	450	422	48	28	14	387.5	15.00
HML80	Tr400 x 5	470	442	52	28	14	402.5	18.50
HML82	Tr410 x 5	480	452	52	32	14	412.5	19.00
HML84	Tr420 x 5	490	462	52	32	14	422.5	19.40
HML86	Tr430 x 5	500	472	52	32	14	432.5	19.80
HML88	Tr440 x 5	520	490	60	32	15	442.5	27.00
HML90	Tr450 x 5	520	490	60	32	15	452.5	23.80
HML92	Tr460 x 5	540	510	60	32	15	462.5	28.00
HML94	Tr470 x 5	540	510	60	32	15	472.5	25.00
HML96	Tr480 x 5	560	530	60	36	15	482.5	29.50
HML98	Tr490 x 5	580	550	60	36	15	492.5	34.00
HML100	Tr500 x 5	580	550	68	36	15	502.5	35.00
HML104	Tr520 x 6	600	570	68	36	15	523	37.00
HML106	Tr530 x 6	630	590	68	40	20	533	47.00
HML108	Tr540 x 6	630	590	68	40	20	543	43.50

• Tr means 30’ thread and the digits are major diameter of thread and pitch.
NOTE: The speci?cation of HML can be applied for HNL.

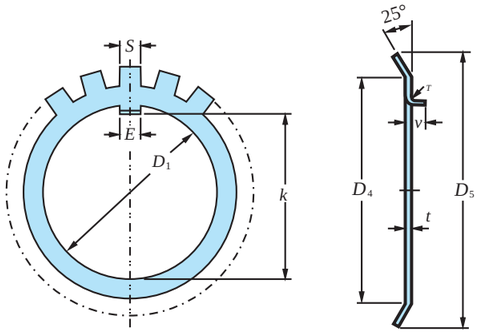

MB
AW

Lock Washers No.	D1 mm	K mm	E mm	t mm	S mm	D4 mm	D5 mm	r mm	u mm	Number of Tongues	Weight per 100 places Kg.	Lock Nuts No.
MB00	10	8.5	3	1	3	13	21	0.5	2	9	0.131	KM 00
MB01	12	10.5	3	1	3	17	25	0.5	2	9	0.192	KM 01
MB02	15	13.5	4	1	4	21	28	1	2.5	13	0.253	KM 02
MB03	17	15.5	4	1	4	24	32	1	2.5	13	0.313	KM 03
MB04	20	18.5	4	1	4	26	36	1	2.5	13	0.350	KM 04
MB05	25	23	5	1.2	5	32	42	1	2.5	13	0.640	KM 05
MB06	30	27.5	5	1.2	5	38	49	1	2.5	13	0.780	KM 06
MB07	35	32.5	6	1.2	5	44	57	1	2.5	15	1.040	KM 07
MB08	40	37.5	6	1.2	6	50	62	1	2.5	15	1.230	KM 08
MB09	45	42.5	6	1.2	6	56	69	1	2.5	17	1.520	KM 09
MB10	50	47.5	6	1.2	6	61	74	1	2.5	17	1.600	KM 10
MB11	55	52.5	8	1.2	7	67	81	1	4	17	1.960	KM 11
MB12	60	57.5	8	1.5	7	73	86	1.2	4	17	2.530	KM 12
MB13	65	62.5	8	1.5	7	79	92	1.2	4	19	2.900	KM 13
MB14	70	66.5	8	1.5	8	85	98	1.2	4	19	3.340	KM 14
MB15	75	71.5	8	1.5	8	90	104	1.2	4	19	3.560	KM 15
MB16	80	76.5	10	1.8	8	95	112	1.2	4	19	4.640	KM 16
MB17	85	81.5	10	1.8	8	102	119	1.2	4	19	5.240	KM 17
MB18	90	86.5	10	1.8	10	108	126	1.2	4	19	6.230	KM 18
MB19	95	91.5	10	1.8	10	113	133	1.2	6	19	6.770	KM 19
MB20	100	96.5	12	1.8	10	120	142	1.2	6	19	7.650	KM 20
MB21	105	100.5	12	1.8	12	126	145	1.2	6	19	8.260	KM 21
MB22	110	105.5	12	2	12	133	154	1.2	6	19	9.400	KM 22
MB23	115	110.5	12	2	12	137	159	1.5	6	19	10.800	KM 23
MB24	120	115	14	2	12	138	164	1.5	6	19	10.500	KM 24
MB25	125	120	14	2	12	148	170	1.5	6	19	11.800	KM 25
MB26	130	125	14	2	12	149	175	1.5	6	19	11.300	KM 26
MB27	135	130	14	2	14	160	185	1.5	6	19	14.400	KM 27
MB28	140	135	16	2	14	160	192	1.5	8	19	14.200	KM 28

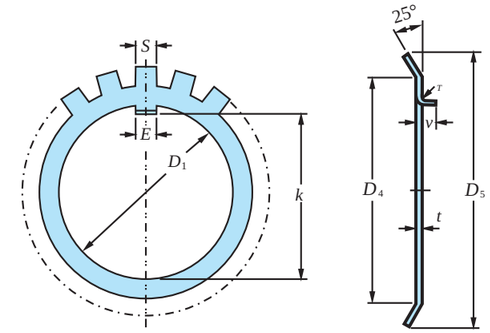

MB
AW

Lock Washers No.	D1 mm	K mm	E mm	t mm	S mm	D4 mm	D5 mm	r mm	u mm	Number of Tongues	Weight per 100 places Kg.	Lock Nuts No.
MB29	145	140	16	2	14	171	202	1.5	8	19	16.800	HM 29
MB30	150	145	16	2	14	171	205	1.5	8	19	15.500	HM 30
MB31	155	147.5	16	2.5	16	182	212	1.5	8	19	20.900	HM 31
MB32	160	154	18	2.5	16	182	217	1.5	8	19	22.200	HM 32
MB33	165	157.5	18	2.5	16	193	222	1.5	8	19	24.100	HM 33
MB34	170	164	18	2.5	16	193	232	1.5	8	19	24.700	HM 34
MB36	180	174	20	2.5	18	203	242	1.5	8	19	26.800	HM 36
MB38	190	184	20	2.5	18	214	252	1.5	8	19	27.800	HM 38
MB40	200	194	20	2.5	18	226	262	1.5	8	19	29.300	HM 40
MB44	220	213	24	3.0	20	250	292	-	-	19	48.300	HM 44
MB48	240	233	24	3.0	20	270	312	-	-	19	50.200	HM 48
MB52	260	253	28	3.0	24	300	342	-	-	23	72.900	HM 52
MB56	280	273	28	3.0	24	320	362	-	-	23	75.900	HM 56

NOTE: The speci?cation of MB can be applied for AW.

MBL AWL

Lock Washers No.	D1 mm	K mm	E mm	t mm	S mm	D4 mm	D5 mm	r mm	u mm	Number of Tongues	Weight per 100 pieces Kg.	Lock Nuts No.
MBL24	120	115	14	2	12	133	155	1.5	6	19	7.7	HML 24
MBL26	130	125	14	2	12	143	165	1.5	6	19	8.7	HML 26
MBL28	140	135	16	2	14	151	175	1.5	8	19	10.9	HML 28
MBL30	150	145	16	2	14	164	190	1.5	8	19	11.3	HML 30
MBL32	160	154	18	2.5	16	174	200	1.5	8	19	16.2	HML 32
MBL34	170	164	18	2.5	16	184	210	1.5	8	19	19	HML 34
MBL36	180	174	20	2.5	18	192	220	1.5	8	19	18	HML 36
MBL38	190	184	20	2.5	18	202	230	1.5	8	19	20.5	HML 38
MBL40	200	194	20	2.5	18	218	240	1.5	8	19	21.4	HML 40

NOTE: The speci?cation of MBL can be applied for AWL.

Lock Plates

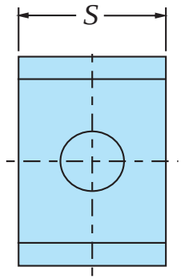

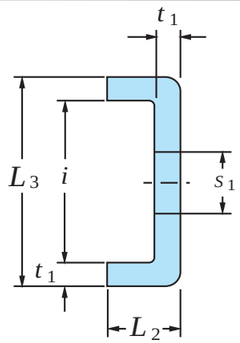

MS31
AL

Lock Plates No.	t1 mm	S mm	L2 mm	S1 mm	i mm	L3 mm	Suitable Lock Nuts No.	Weight per 100 pcs. Kg
MS3144	4	20	12	9	22.5	30.5	HM 3144	2.600
MS3148	4	20	12	9	22.5	30.5	HM 3148	2.600
MS3152	4	24	12	12	25.5	33.5	HM 3152	3.390
MS3156	4	24	12	12	25.5	33.5	HM 3156	3.390
MS3160	4	24	12	12	30.5	38.5	HM 3160	3.790
MS3164	5	24	15	12	31	41	HM 3164	5.350
MS3168	5	28	15	14	38	48	HM 3168	6.650
MS3172	5	28	15	14	38	50	HM 3172	6.650
MS3176	5	32	15	14	40	55	HM 3176	7.960
MS3180	5	32	15	18	45	55	HM 3180	8.200
MS3184	5	32	15	18	45	55	HM 3184	8.200
MS3188	5	36	15	18	43	53	HM 3188	9.000
MS3192	5	36	15	18	43	53	HM 3192	9.000
MS3196	5	36	15	18	53	63	HM 3196	10.400
MS31100	5	40	15	18	45	55	HM 31100	10.500

NOTE: The speci?cation of MS31 can be applied for AL

MS30 ALL

Lock Plates No.	t1 mm	S mm	L2 mm	S1 mm	i mm	L3 mm	Suitable Lock Nuts No.	Weight per 100 pcs. Kg
MS3044	4	20	12	7	13.5	21.5	HM 3044	2.120
MS3048	4	20	12	9	17.5	25.5	HM 3048	2.290
MS3052	4	20	12	9	17.5	25.5	HM 3052	2.290
MS3056	4	24	12	9	17.5	25.5	HM 3056	2.920
MS3060	4	24	12	9	20.5	28.5	HM 3060	3.160
MS3064	5	24	15	9	21	31	HM 3064	4.560
MS3068	5	24	15	9	21	31	HM 3068	4.560
MS3072	5	28	15	9	20	30	HM 3072	5.030
MS3076	5	28	15	12	24	34	HM 3076	5.280
MS3080	5	28	15	12	24	34	HM 3080	5.280
MS3084	5	32	15	12	24	34	HM 3084	6.110
MS3088	5	32	15	14	28	38	HM 3088	6.450
MS3092	5	32	15	14	28	38	HM 3092	6.450
MS3096	5	36	15	14	28	38	HM 3096	7.290
MS30100	5	36	15	14	28	38	HM 30100	7.290

NOTE: The speci?cation of MS30 can be applied for ALL.

NOTES